6’-8’ EasyFit Adjustable Tablecloth Template

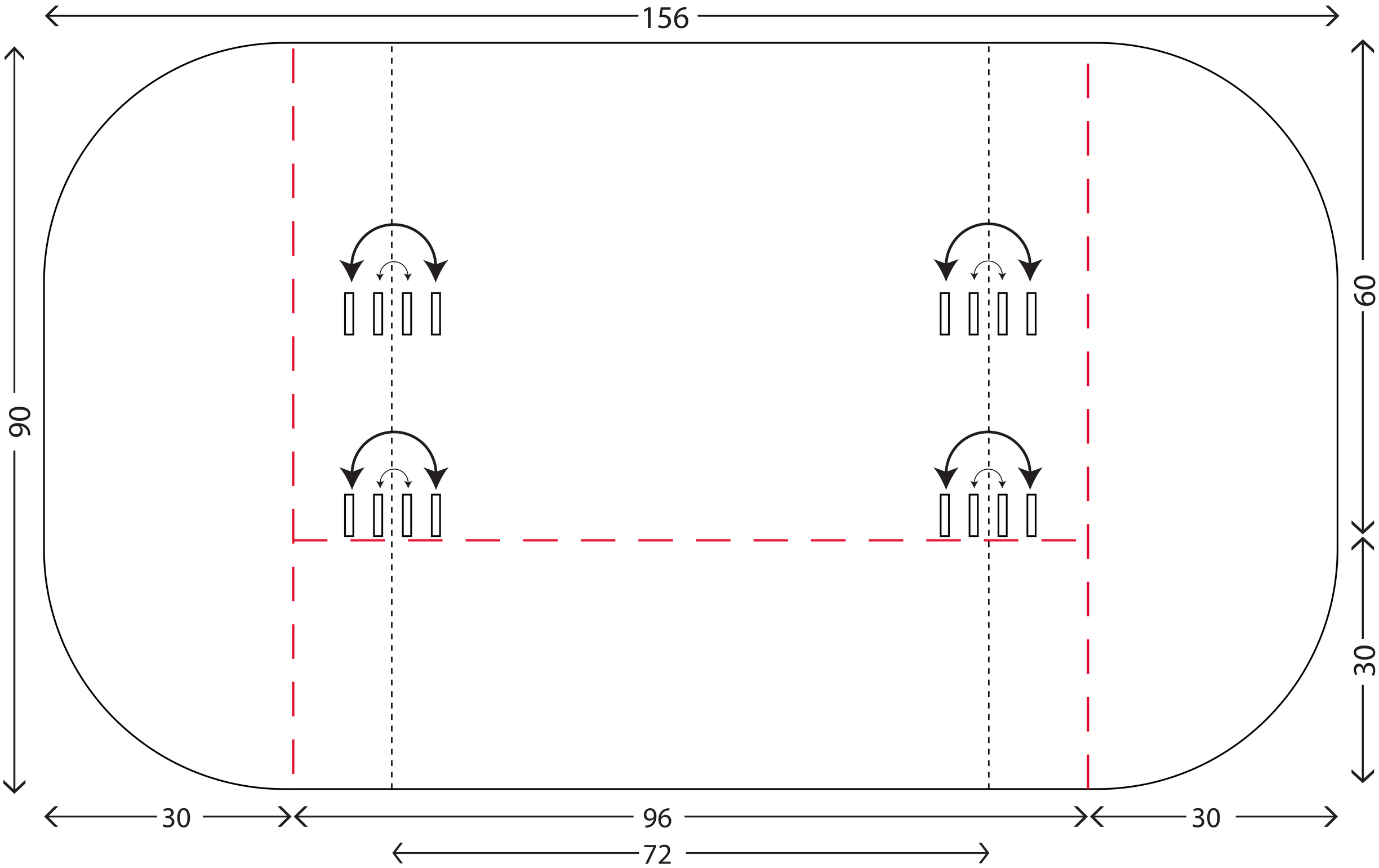

RED Dotted lines designate seams

6’-8’ EasyFit Adjustable (Adjusts to fit both 6’ x 30” x 30” & 8’ x 30” x 30” tables)

ORDERS UNDER 12 PCS SHIP 5 BUSINESS DAYS FROM LAYOUT APPROVAL

Fabric Color _____

Pantone colors in the print _____

Name: _____

FILE BUILT AT. 100%

File types: Vector files are best for logos and text: .ai or .eps
For image files: tiff or .png files with a transparent background at 100-150 dpi at actual size

This product is being digitally printed in 4 color process (CMYK). PMS Colors will be matched as close as the 4 color process can achieve, it is not always an exact match. Fine white lateral and horizontal lines on throw style proofs designate fabric seams. The front panel of the cloth is digitally dye-sublimated to match the rest of the cloth color chosen as well as the graphic elements. Some variation between the tablecloth color and the sublimated front panel should be anticipated however when the cloth is displayed is not seen as a noticeable difference.
Do not expect the finished product to look like the colors displayed on your computer monitor. Reference a PMS book for graphic colors and if an exact fabric color is critical be sure to look at a physical swatch of the fabric. If PMS Colors are not called out and the proof is approved on CMYK values only, we will not accept returns for color discrepancies. It is recommended that PMS colors be assigned to spot color elements or a physical “match print” be provided if color is critical.

If file is over 7MB, please email artwork@paws2purrfection.com and we’ll give you instructions to upload your artwork.

Paws 2 Purrfection, LLC
(800) 566-8827
artwork@paws2purrfection.com

Paws 2 Purrfection, LLC
Promotions, Displays & More
Make your next promotion PURR...fect!
800-566-8827